An Introduction to Microprocessor Architecture using intel 8085

What is Microprocessor?

A silicon chip that contains a CPU. In the world of personal computers, the terms *microprocessor* and CPU are used interchangeably.

At the heart of all personal computers and most workstations sits a microprocessor. Microprocessors also control the logic of almost all digital devices, from clock radios to fuel-injection systems for automobiles

Microprocessor def.. Con..

- Microprocessor is a programmable device
- It can be instructed to perform given tasks with in its capability.
- The programmer selects instruction from the list and determines the sequence of execution for a given task.
- It takes input from the input device and process the input as it behaves like a CPU and gives the output.

Microprocessor def.. Con..

- Microprocessor is a clock driven semiconductor device consisting of electronic logic circuits manufactured by using a LSI or VLSI technique.
- Microprocessor can be divided into three segments

  1)ALU

  2)Register array

  3)Control unit

Block diagram of microprocessor

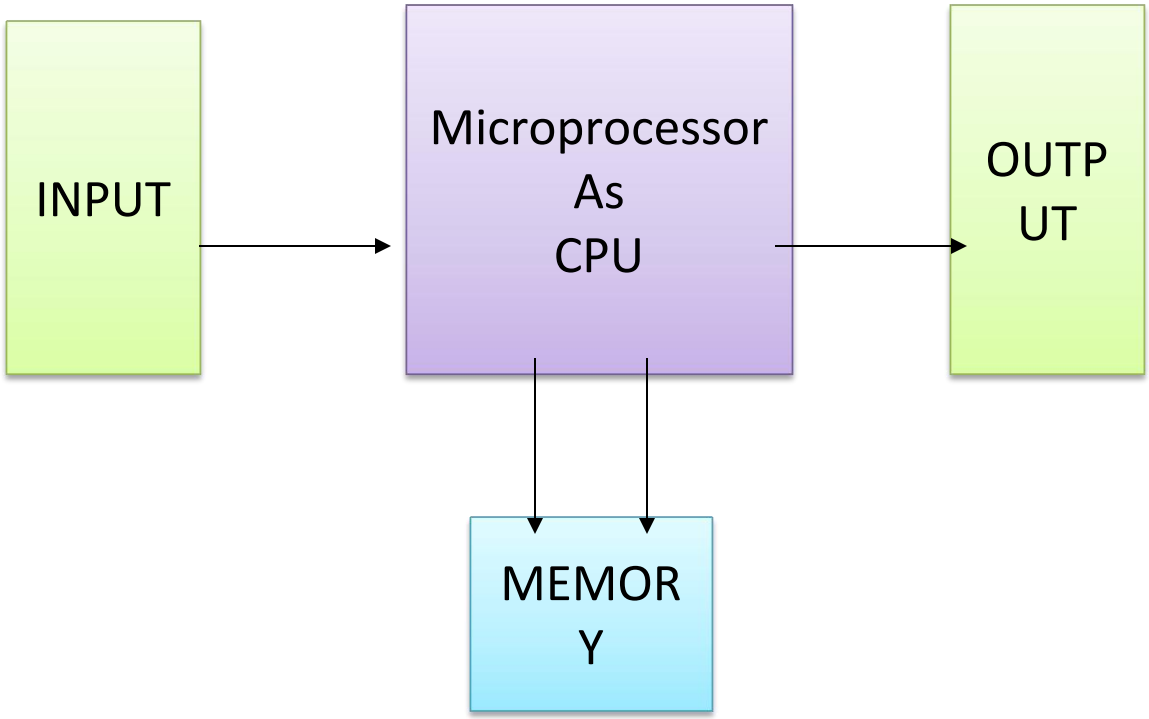

Characteristics which differentiate microprocessors

- **Instruction set**: The set of instructions that the microprocessor can execute.
- **bandwidth** **:** The number of bits processed in a single instruction.
- **clock speed** **:** Given in megahertz (MHz), the clock speed determines how many instructions per second the processor can execute.

Structure of microprocessor

- Chip containing no. of elements for the processing purposes.

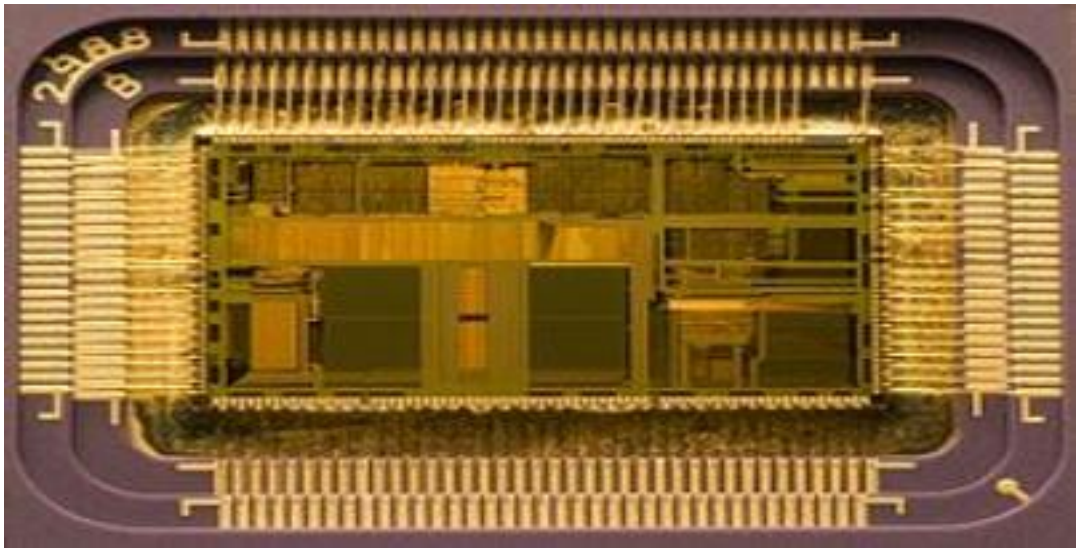

Microprocessor History

- A microprocessor -- also known as a CPU or central processing unit .It is a complete computation engine that is fabricated on a single chip .

- Intel coined the term 'MICROPROCESSOR' and in 1971 released the first 4-bit microprocessor as the 4004 having 2300 transistors,640 bytes of memory addressing capacity and a 108 kHz clock speed.

- The 4004 was not very powerful -- all it could do was add and subtract, and it could only do that 4 bits at a time .The 4004 powered one of the first portable electronic calculators.

- The Intel 4004 was quickly replaced by the 8-bit microprocessor (Intel 8008). In the mid 1970's,the Intel 8080 was widely used in control applications & small computers also were designed using 8080 as CPU-also known as 'Microcomputers'.

- Most microcomputers are now built with 32 & 64-bit microprocessor. The 8-bit microprocessors are being used as programmable logic devices in control applications & more powerfull µ-processors are being used for mathematical computing & in data processing.

Continued…

- Often the processor is required to manage various different tasks that have to be scheduled somehow and must also deal with outside interrupt sources such as an alarm when something goes wrong.
- ***Real-time systems*** are those in which timeliness is as important as the correctness of the outputs, although this does NOT mean that they have to be ?fast systems?.
  - A real-time system does not have to process data in microseconds to be considered real-time - it must simply have response times that are constrained and thus predictable.

Real life applications of microprocessor

- Microprocessors are used to handle a set of tasks that control one or more external events or systems.
- Microprocessors are typically used in either ***reactive*** or ***embedded*** systems.
  - ***Reactive systems*** are those that have an ongoing interaction with their environment - for example, a fire-control system that constantly reacts to buttons pressed by a pilot.
  - ***Embedded systems*** are those used to control specialized hardware in which the computer system is installed - for example, the microprocessor system used to control the fuel/air mixture in the carburetor of many automobiles.
    - In embedded systems the software system is completely encapsulated by the hardware that it controls.

Intel 8085

- The Intel 8085 is an 8-bit microprocessor introduced by Intel in 1977. It was binary-compatible with the more-famous Intel 8080 but required less supporting hardware, thus allowing simpler and less expensive microcomputer systems to be built.
- The 8085 had a long life as a controller. The processor has seven 8-bit registers named A, B, C, D, E, H, and L, where A is the 8-bit accumulator and the other six can be used as independent byte-registers or as three 16-bit register pairs, BC, DE, and HL.
- Many engineering schools the 8085 processor is used in introductory microprocessor courses.

8085 INTRODUCTION

The features of INTEL 8085 are :

- It is an 8 bit processor.
- It is a single chip N-MOS device with 40 pins.
- It has multiplexed address and data bus.(AD0-AD7).
- It works on 5 Volt dc power supply.
- The maximum clock frequency is 3 MHz while minimum frequency is 500kHz.
- It provides 74 instructions with 5 different addressing modes.

8085 INTRODUCTION

- It provides 16 address lines so it can access 2^16 =64K bytes of memory.
- It generates 8 bit I/O address so it can access 2^8=256 input ports.
- It provides 5 hardware interrupts:TRAP, RST 5.5, RST 6.5, RST 7.5,INTR.
- It provides Acc ,one flag register ,6 general purpose registers and two special purpose registers(SP,PC).
- It provides serial lines SID , SOD. So serial peripherals can be interfaced with 8085 directly.

Intel 8085 Pin Configuration

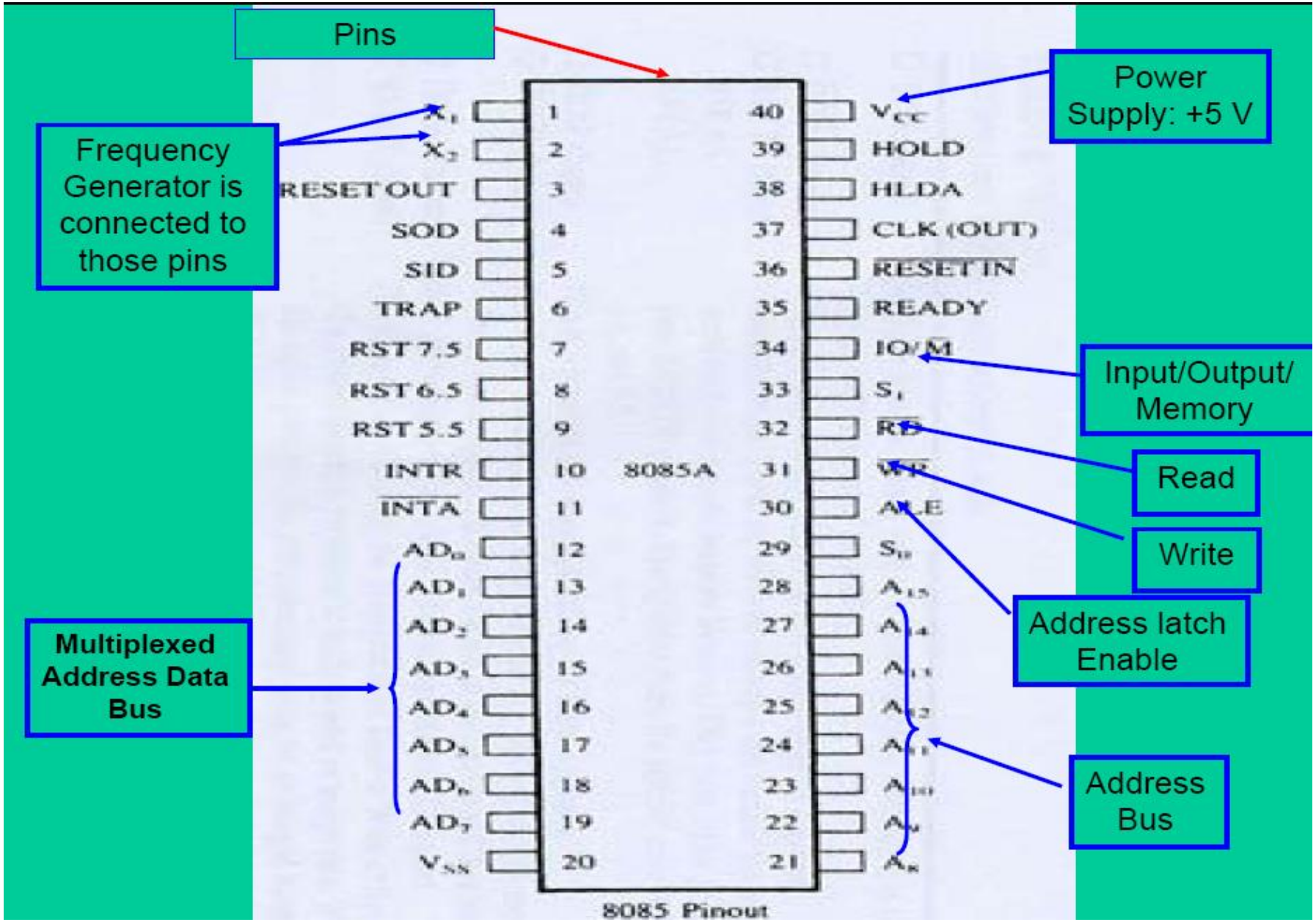

8085 PIN DESCRIPTION

Some important pins are :

- AD_0-AD_7: Multiplexed Address and data lines.
- A_8-A_{15}: Tri-stated higher order address lines.
- ALE: Address latch enable is an output signal. It goes high when operation is started by processor .
- S0,S1: These are the status signals used to indicate type of operation.
- RD^{-}: Read is active low input signal used to read data from I/O device or memory.
- WR^{-}:Write is an active low output signal used write data on memory or an I/O device.

8085 PIN DESCRIPTION

- READY: This an output signal used to check the status of output device. If it is low, µP will WAIT until it is high.
- TRAP: It is an Edge triggered highest priority , non mask able interrupt. After TRAP, restart occurs and execution starts from address 0024H.
- RST5.5,6.5,7.5:These are maskable interrupts and have low priority than TRAP.
- INTR¯&INTA:INTR is a interrupt request signal after which µP generates INTA or interrupt acknowledge signal.
- IO/M¯:This is output pin or signal used to indicate whether 8085 is working in I/O mode(IO/M¯=1) or Memory mode(IO/M¯=0).

8085 PIN DESCRIPTION

- HOLD&HLDA:HOLD is an input signal .When µP receives HOLD signal it completes current machine cycle and stops executing next instruction. In response to HOLD µP generates HLDA that is HOLD Acknowledge signal.
- RESET IN¯:This is input signal. When RESET IN¯ is low µp restarts and starts executing from location 0000H.
- SID: Serial input data is input pin used to accept serial 1 bit data .
- X_1X_2 :These are clock input signals and are connected to external LC, or RC circuit. These are divide by two so if 6 MHz is connected to X_1X_2, the operating frequency becomes 3 MHz.
- VCC&VSS:Power supply VCC=+ -5Volt& VSS=-GND reference.

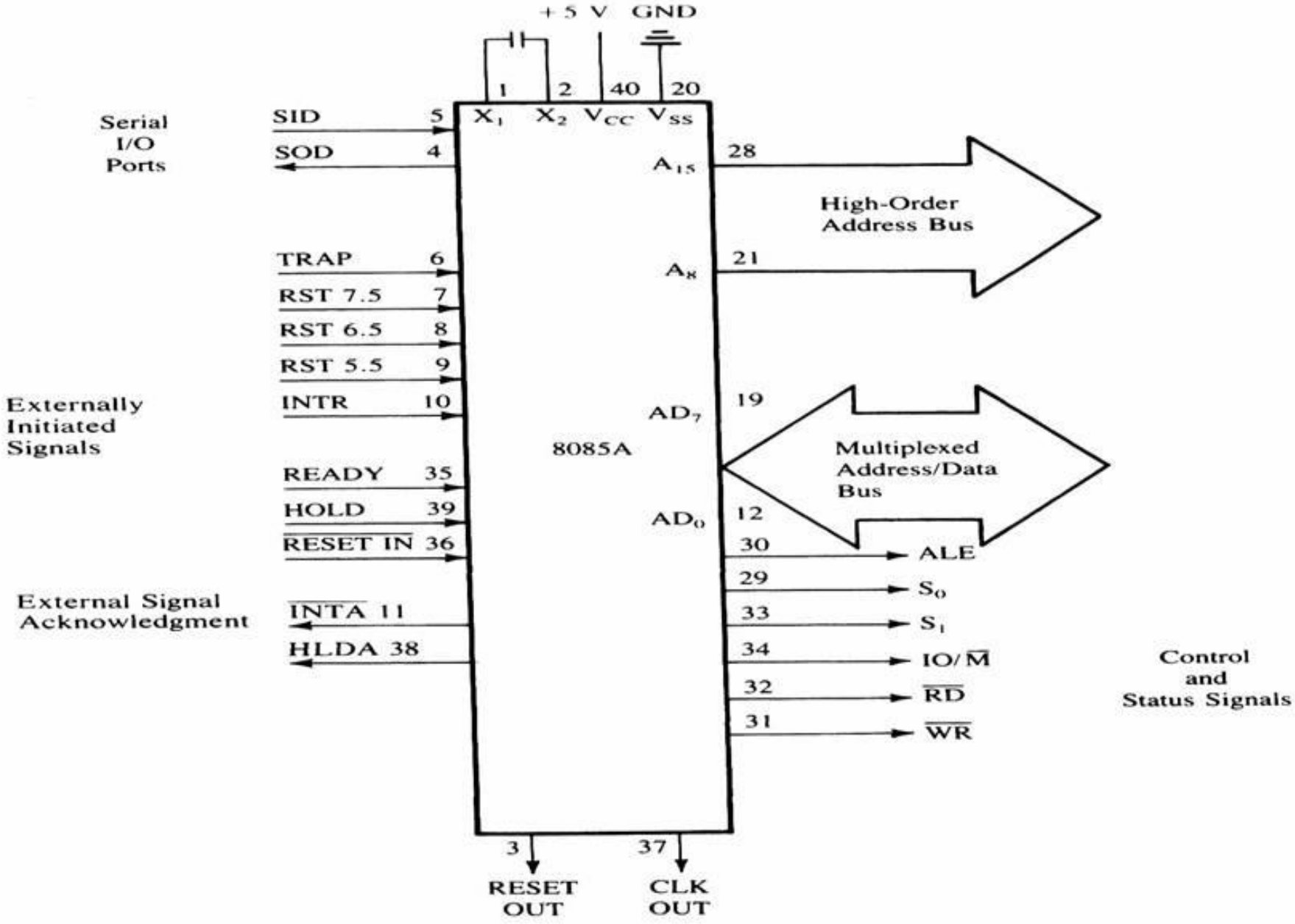

Signals and I/O Pins

Architecture of 8085

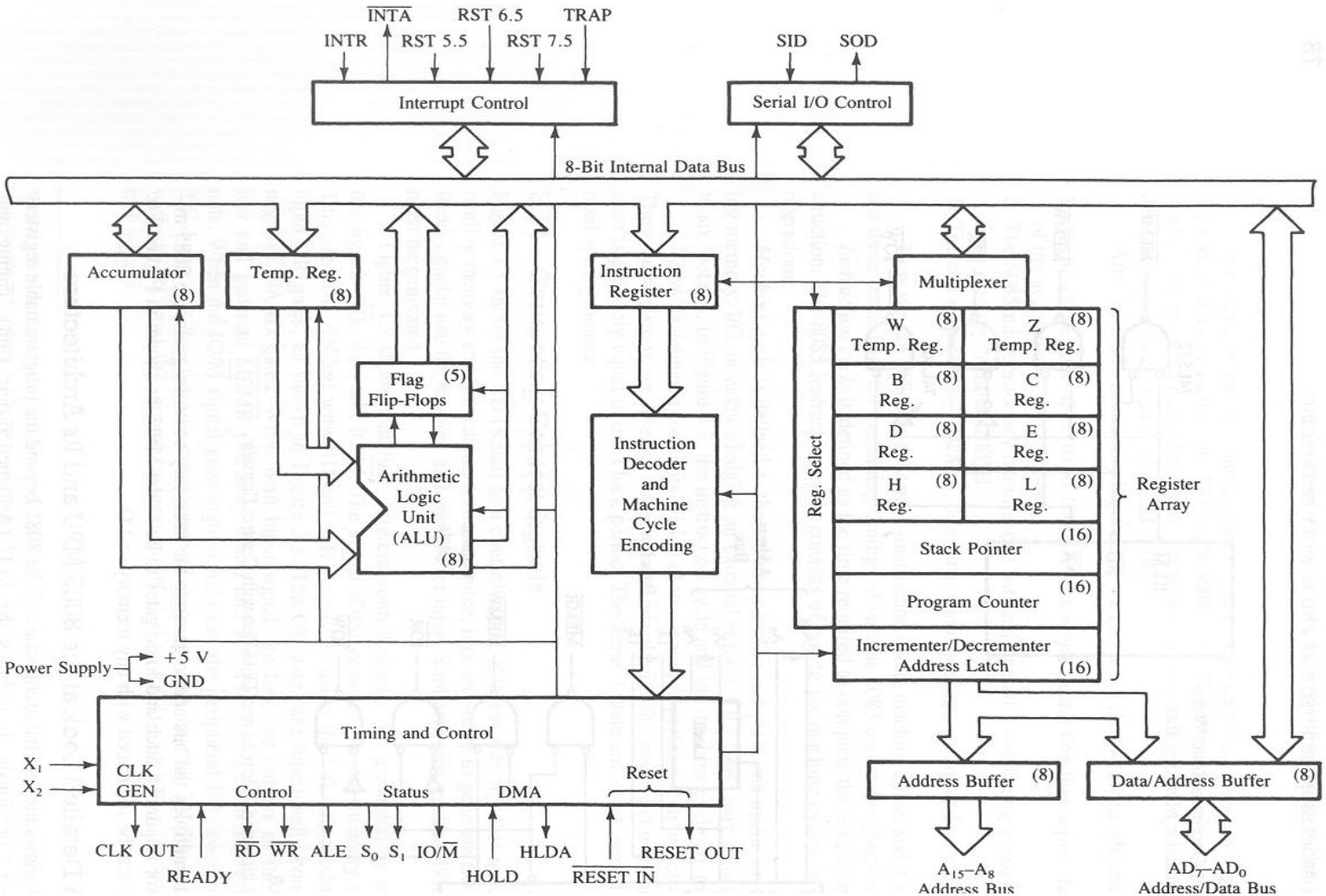

Arithmetic and Logical group

Accumulator: It is 8 bit general purpose register.

- It is connected to ALU.
- So most of the operations are done in Acc.

Temporary register: It is not available for user

- All the arithmetic and logical operations are done in the temporary register but user can't access it.
- W and Z registers are temporary registers. These registers are used to hold 8-bit data during execution of some instructions.

Flag: It is a group of 5 flip flops used to know status of various operations done.

- The Flag Register along with Accumulator is called PSW

or Program Status Word.

Arithmetic and Logical group

Flag Register is given by:

S	Z	X	AC	X	P	X	CY

S:Sign flag is set when result of an operation is negative.

Z:Zero flag is set when result of an operation is 0.

Ac: Auxiliary carry flag is set when there is a carry out of lower nibble or lower four bits of the operation.

CY: Carry flag is set when there is carry generated by an operation.

P:Parity flag is set when result contains even number of 1's.

Rest are don't care flip flops.

Register Group

- Temporary registers (W,Z):These are not available for user. These are loaded only when there is an operation being performed.
- General purpose:There are six general purpose registers in 8085 namely B,C,D,E,H,L.These are used for various data manipulations.
- Special purpose :There are two special purpose registers in 8085:

1. SP :Stack Pointer.
2. PC:Program Counter.

Register Group

Stack Pointer: This is a temporary storage memory 16 bit register. Since there are only 6 general purpose registers, there is a need to reuse them .

- Whenever stack is to be used previous values are PUSHED on stack and then after the program is over these values are POPED back.

Program Counter: It is 16 bit register used to point the location from which the next instruction is to be fetched.

- When a single byte instruction is executed PC is automatically incremented by 1.
- Upon reset PC contents are set to 0000H and next instruction is fetched onwards.

INSTRUCTION REGISTER,DECODER & CONTROL

- Instruction register: When an instruction is fetched , it is executed in instruction register. This register takes the Opcode value only.
- Instruction decoder: It decodes the instruction from instruction register and then to control block.
- Timing and control: This is the control section of μP. It accepts clock input .
- Address buffer: 8-bit unidirectional buffer used to drive external high order address bus A15-A8.
- Address/Data buffer: 8-bit bi-directional buffer used to drive multiplexed address / data bus.
- Incrementer/Decrementer address latch: 16-bit register used to increment or decrement the contents of program counter.

INTERRUPT CONTROL

- It accepts different interrupts like TRAP INT5.5,6.5,7.5and INTR.

SERIAL IO CONTROL GROUP

- It is used to accept the serial 1 bit data by using SID and SOD signals and it can be performed by using SIM & RIM instructions.

Mind map

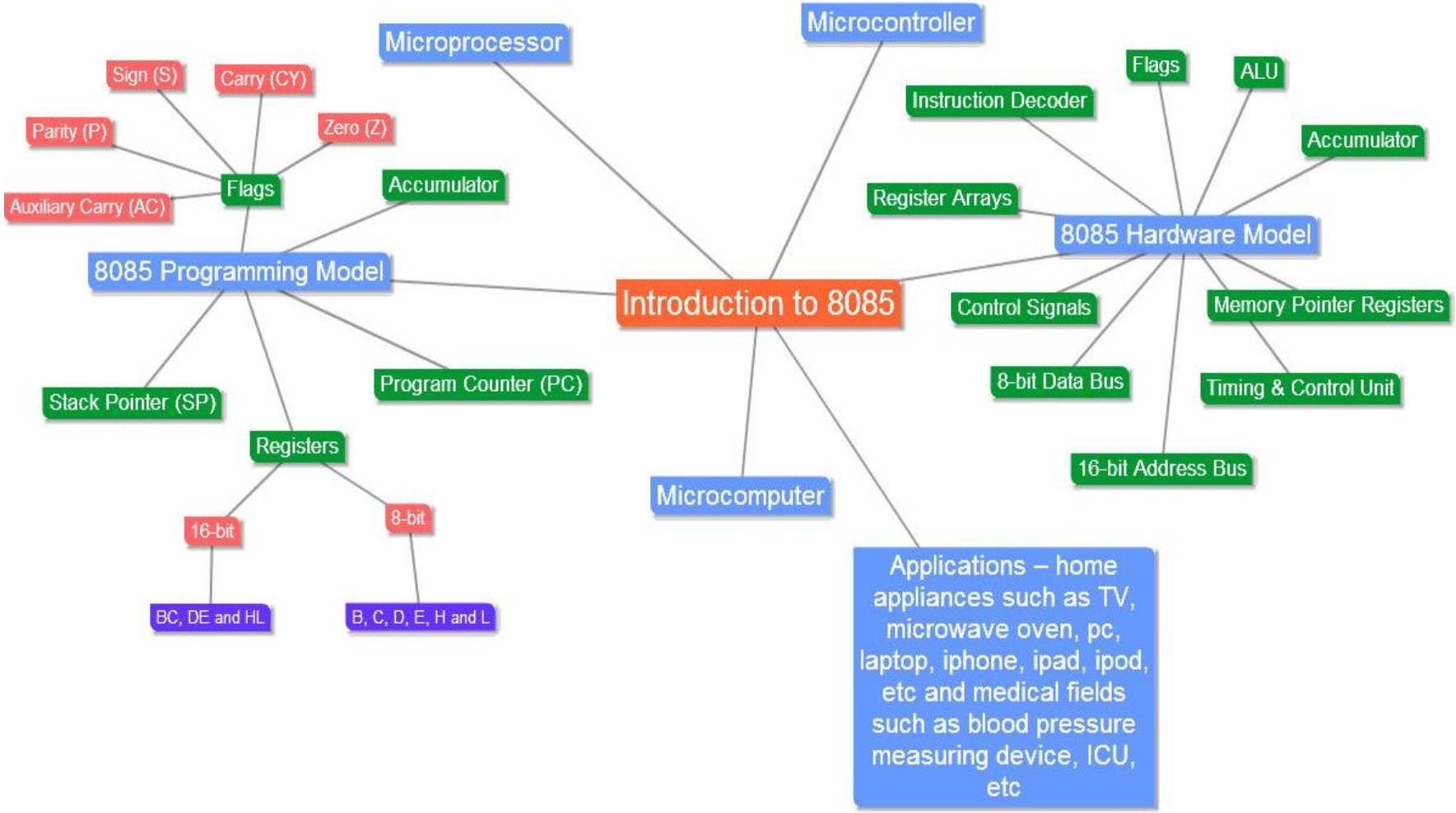
Introduction to 8085
Microprocessor
Microcontroller
Microcomputer
Applications – home appliances such as TV, microwave oven, pc, laptop, iphone, ipad, ipod, etc and medical fields such as blood pressure measuring device, ICU, etc
8085 Programming Model
Flags
Sign (S)
Carry (CY)
Parity (P)
Zero (Z)
Auxiliary Carry (AC)
Accumulator
Stack Pointer (SP)
Program Counter (PC)
Registers
16-bit
8-bit
BC, DE and HL
B, C, D, E, H and L
8085 Hardware Model
Instruction Decoder
Flags
ALU
Accumulator
Register Arrays
Control Signals
Memory Pointer Registers
8-bit Data Bus
Timing & Control Unit
16-bit Address Bus